CARTON SEALER

PT ASIA GROUP

BUSINESS UNIT

PACKING MACHINE

PW-551BE Top & Bottom Belt Driven Case Sealer (not include extension roller table)

Features	Option
• New tape head	• Extension roller table
• Both side compression rollers	• 60 sec. auto-stop
• Two-side guiding rail	• Stainless steel structure SUS #304
• Casters with brake	• 3Ø, 220/380/415/440V

Power	1Ø, 110/220V, 50/60Hz (3Ø option)
OPP	2" / 3" (please advise when ordering)
Sealing Size	L 150 ~ ∞ x W 200 ~ 500 x H 120 ~ 500 mm (2"), 3" W +25mm
Capacity	30 box/min. for box length 300 mm (Belt speed 20 M/min.)
Net Weight	118 Kgs
Machine Size	L 814 x W 744 x H 1346 ~ 1546 mm

PW-551TB Top & Bottom Belt Driven Case Sealer (not include extension roller table)

Features	Option
• New tape head	• Extension roller table
• Both side compression rollers	• 60 sec. auto-stop
• Top mast with cushion	• Stainless steel structure SUS #304
• Two-side guiding rail	• 3Ø, 220/380/415/440V
• Casters with brake	

Power	1Ø, 110/220V, 50/60Hz (3Ø option)
OPP	2" / 3" (please advise when ordering)
Sealing Size	L 150 ~ ∞ x W 200 ~ 500 x H 120 ~ 500 mm (2"), 3" W +25mm
Capacity	30 box/min. for box length 300 mm (Belt speed 20 M/min.)
Net Weight	151 Kgs
Machine Size	L 1200 x W 790 x H 1425 ~ 1770 mm

PW-552TB Top & Bottom Belt Driven Case Sealer (not include extension roller table)

Features	Option
• New tape head	• Extension roller table
• Both side compression rollers	• 60 sec. auto-stop
• Top mast with cushion	• Stainless steel structure SUS #304
• Two-side guiding rail	• 3Ø, 220/380/415/440V
• Casters with brake	

Power	1Ø, 110/220V, 50/60Hz (3Ø option)
OPP	2" / 3" (please advise when ordering)
Sealing Size	L 150 ~ ∞ x W 200 ~ 500 x H 120 ~ 500 mm (2"), 3" W +25mm
Capacity	30 box/min. for box length 300 mm (Belt speed 20 M/min.)
Net Weight	160 Kgs
Machine Size	L 1044 x W 779 x H 1569 ~ 1764 mm

PW-561 Bottom Seal with Top & Bottom Belt Driven Case Sealer (not include extension roller table)

Features	Option
• New tape head	• 60 sec. auto-stop
• Table with belt driven	• Stainless steel structure SUS #304
• Top mast with cushion	• 3Ø, 220/380/415/440V
• Two-side guiding rail	
• Casters with brake	

Power	1Ø, 110/220V, 50/60Hz (3Ø option)
OPP	2" / 3" (please advise when ordering)
Sealing Size	L 150 ~ 500 x W 200 ~ 500 x H 120 ~ 500 mm (2"), 3" W +30mm
Capacity	30 box/min. for box length 300 mm (Belt speed 20 M/min.)
Net Weight	135 Kgs
Machine Size	L 1200 x W 780 x H 1721 ~ 1961 mm

PW-542S Side Belt Driven Case Sealer (not include extension roller table)

Features	Option
• New tape head • Single pillar : Small-sized structure • Both side compression rollers • Belt driven with universal bearing • Casters with brake	• Extension roller table • 60 sec. auto-stop • Stainless steel structure SUS #304 • 3Ø, 220/380/415/440V

Power	1Ø, 110/220V, 50/60Hz (3Ø option)
OPP	2” / 3” (please advise when ordering)
Sealing Size	L 150 ~ ∞ x W 120 ~ 500 x H 110 ~ 500 mm (2”), 3” W +25mm
Capacity	30 box/min. for box length 300 mm (Belt speed 20 M/min.)
Net Weight	148 Kgs
Machine Size	L 967 x W 946 x H 1363 ~ 1563 mm

PW-553BE Side Belt Driven Case Sealer (not include extension roller table)

Features	Option
• New tape head • Both side compression rollers • Top mast with cushion • Belt driven with universal bearing • Casters with brake	• Extension roller table • 60 sec. auto-stop • Stainless steel structure SUS #304 • 3Ø, 220/380/415/440V

Power	1Ø, 110/220V, 50/60Hz (3Ø option)
OPP	2” / 3” (please advise when ordering)
Sealing Size	L 150 ~ ∞ x W 120 ~ 500 x H 110 ~ 500 mm (2”), 3” W +25mm
Capacity	30 box/min. for box length 300 mm (Belt speed 20 M/min.)
Net Weight	146 Kgs
Machine Size	L 960 x W 929 x H 1270 ~ 1470 mm

PW-553S Side Belt Driven Case Sealer (not include extension roller table)

Features	Option
• New tape head • Both side compression rollers • Top mast with cushion • Belt driven with universal bearing • Casters with brake	• Extension roller table • 60 sec. auto-stop • Stainless steel structure SUS #304 • 3Ø, 220/380/415/440V

Power	1Ø, 110/220V, 50/60Hz (3Ø option)
OPP	2” / 3” (please advise when ordering)
Sealing Size	L 150 ~ ∞ x W 120 ~ 500 x H 85 ~ 500 mm (2”), 3” W +25mm
Capacity	30 box/min. for box length 300 mm (Belt speed 20 M/min.)
Net Weight	171 Kgs
Machine Size	L 1280 x W 964 x H 1396 ~ 1761 mm

PW-553M Side Belt Driven Case Sealer (not include extension roller table)

Features	Option
• New tape head • Both side compression rollers • Top mast with cushion • Belt driven with universal bearing • Casters with brake	• Extension roller table • 60 sec. auto-stop • Stainless steel structure SUS #304 • 3Ø, 220/380/415/440V

Power	1Ø, 110/220V, 50/60Hz (3Ø option)
OPP	2” / 3” (please advise when ordering)
Sealing Size	L 150 ~ ∞ x W 120 ~ 500 x H 110 ~ 500 mm (2”), 3” W +25mm
Capacity	30 box/min. for box length 300 mm (Belt speed 20 M/min.)
Net Weight	155 Kgs
Machine Size	L 960 x W 974 x H 1376 ~ 1576 mm

PW-553SF Side Belt Driven Case Sealer

Features	Option
• New tape head	• 60 sec. auto-stop
• Dual side pressing rollers	• Close type extension roller table
• Top mast with cushion	• 3Ø, 220/380/415/440V
• Adjustable tape overlap length	• Extension roller table

Power	1Ø, 110/220/230/240V (50/60Hz); 3Ø, 220/380/415/440V (50/60Hz)
OPP	2”
Sealing Size	L 250 ~500x W 250 ~ 500 x H 85~ 500 mm
Capacity	15box/min.
Net Weight	180Kgs
Machine Size	L 1280x W 964 x H 1396 ~1765 mm

PW-553SFTB Top and Bottom Belt Driven Case Sealer

Features	Option
• New tape head	• 60 sec. auto-stop
• Small-sized structure	• Fixing washer for 2”, 2.5” tape
• Top mast with cushion	• 3Ø, 220/380/415/440V
• Widened arc belt	• Extension roller table

Power	1Ø, 110/220/230/240V (50/60Hz); 3Ø, 220/380/415/440V (50/60Hz)
OPP	2”
Sealing Size	L 150 ~ ∞ x W 200 ~ 500 x H 120~ 500 mm
Capacity	30box/min.
Net Weight	151Kgs
Machine Size	L 1200x W 779 x H 1420 ~1765 mm

PW-562M Mini-type with Side Belt Driven Case Sealer

Features	Option
• New tape head	• 60 sec. auto-stop
• Small-sized structure	• Stainless steel structure SUS #304
• Belt driven with universal bearing	• 3Ø, 220/380/415/440V
• Casters with brake	•

Power	1Ø, 110/220V, 50/60Hz (3Ø option)
OPP	1.5”
Sealing Size	L 120 ~ ∞ x W 100 ~ 200 x H 50 ~ 300 mm
Capacity	25 box/min.
Net Weight	90 Kgs
Machine Size	L 730 x W 659 x H 1210 ~ 1350 mm

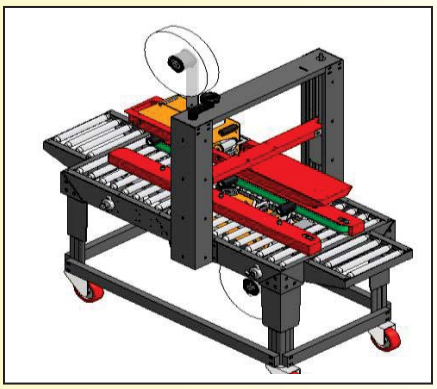

PW-562MS Mini-type with Side Belt Driven Case Sealer

Features	Option
• New tape head	• 60 sec. auto-stop
• Small-sized structure	• Stainless steel #304
• Top mast with cushion	• 1Ø, 110/220/230/240V

Power	1Ø, 110/220/230/240V (50/60Hz)
OPP	2”
Sealing Size	L 150 ~ ∞ x W 100 ~ 200 x H 90 ~ 400 mm
Capacity	25 box/min.
Net Weight	108Kgs
Machine Size	L 970 x W 659 x H 1210 ~ 1330~1470mm

PW-554TS Top & Side Belt Driven Case Sealer (not include extension roller table)

Features	Option
• New tape head	• Extension roller table
• Both side compression rollers	• 60 sec. auto-stop
• Top mast with cushion	• Stainless steel structure SUS #304
• Belt driven with universal bearing	• 3Ø, 220/380/415/440V
• Casters with brake	

Power	1Ø, 110/220V, 50/60Hz (3Ø option)
OPP	2” / 3” (please advise when ordering)
Sealing Size	L 150 ~ ∞ x W 200 ~ 500 x H 120 ~ 500 mm (2”), 3” W +25mm
Capacity	30 box/min. for box length 300 mm (Belt speed 20 M/min.)
Net Weight	198 Kgs
Machine Size	L 1280 x W 964 x H 1396 ~ 1761 mm

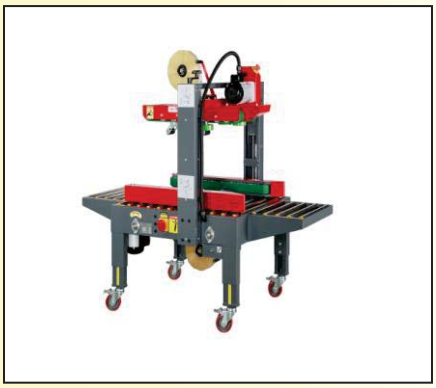

PW-554TM Top & Side Belt Driven Case Sealer (not include extension roller table)

Features	Option
• New tape head	• Extension roller table
• Both side compression rollers	• 60 sec. auto-stop
• Top mast with cushion	• Stainless steel structure SUS #304
• Belt driven with universal bearing	• 3Ø, 220/380/415/440V
• Casters with brake	

Power	1Ø, 110/220V, 50/60Hz (3Ø option)
OPP	2” / 3” (please advise when ordering)
Sealing Size	L 150 ~ ∞ x W 200 ~ 500 x H 120 ~ 500 mm (2”), 3” W +25mm
Capacity	30 box/min. for box length 300 mm (Belt speed 20 M/min.)
Net Weight	175 Kgs
Machine Size	L 960 x W 974 x H 1376 ~ 1576 mm

PW-555AUM Fully-auto with Side Belt Driven Case Sealer (not include extension roller table)

Features	Option
• New tape head	• Extension roller table
• Both side compression rollers	• 60 sec. auto-stop
• Top mast with cushion	• Stainless steel structure SUS #304
• Belt driven with universal bearing	• 3Ø, 220/380/415/440V
• With search height sensor	
• Regular mode & Memory mode	

Power	1Ø, 110/220V, 50/60Hz (3Ø option)
OPP	2” / 3” (please advise when ordering)
Sealing Size	L 300 ~ ∞ x W 120 ~ 500 x H 150 ~ 500 mm (2”), 3” W +25mm
Capacity	8 box/min. for box length 300 mm (Belt speed 20 M/min.)
Net Weight	220 Kgs
Machine Size	L 1079 x W 933 x H 1316 ~ 1576 mm

PW-555AUC Fully-auto with Side Belt Driven Case Sealer (not include extension roller table)

Features	Option
• New tape head	• Extension roller table
• Both side clamping device	• 60 sec. auto-stop
• Top mast with cushion	• Stainless steel structure SUS #304
• Belt driven with universal bearing	• 3Ø, 220/380/415/440V
• With search height sensor	
• Regular mode & Memory mode	

Power	1Ø, 110/220V, 50/60Hz (3Ø option)
OPP	2” / 3” (please advise when ordering)
Sealing Size	L 300 ~ ∞ x W 120 ~ 500 x H 150 ~ 500 mm (2”), 3” W +25mm
Capacity	8 box/min. for box length 300 mm (Belt speed 20 M/min.)
Net Weight	230 Kgs
Machine Size	1079 x 933 x 1316 ~ 1576 mm

PW-556AU Fully-auto with Top & Side Belt Driven Case Sealer (not include extension roller table)

Features	Option
• New tape head	• Extension roller table
• Both side compression rollers	• 60 sec. auto-stop
• Top mast with cushion	• Stainless steel structure SUS #304
• Belt driven with universal bearing	• 3Ø, 220/380/415/440V
• With search height sensor	
• Regular mode & Memory mode	

Power	1Ø, 110/220V, 50/60Hz (3Ø option)
OPP	2” / 3” (please advise when ordering)
Sealing Size	L 300 ~ ∞ x W 200 ~ 500 x H 150 ~ 500 mm (2”), 3” W +25mm
Capacity	8 box/min. for box length 300 mm (Belt speed 20 M/min.)
Net Weight	245 Kgs
Machine Size	L 1288 x W 933 x H 1291 ~ 1551 mm

PW-557F Folding and Sealing, Side Belt Driven Case Sealer (not include extension roller table)

Features	Option
• New tape head	• Extension roller table
• Automatic upper flap-folding	• 60 sec. auto-stop
• Both side compression rollers	• Stainless steel structure SUS #304
• Top mast with cushion	• Detection for no tape, sealing failure, tape not cut off
• Belt driven with universal bearing	
• Casters with brake	• 3Ø, 220/380/415/440V

Power	1Ø, 110/220V, 50/60Hz (3Ø option)
OPP	2” / 3” (please advise when ordering)
Sealing Size	L 200 ~ 600 x W 120 ~ 500 x H 110 ~ 500 mm (2”), 3” W +25mm
Capacity	11 box/min. for box length 300 mm (Belt speed 20 M/min.)
Net Weight	310 Kgs
Machine Size	L 2086 x W 1002 x H 1551 ~ 1916 mm

PW-558F Folding and Sealing, Top & Side Belt Driven Case Sealer (not include extension roller table)

Features	Option
• New tape head	• Extension roller table
• Automatic upper flap-folding	• 60 sec. auto-stop
• Both side compression rollers	• Stainless steel structure SUS #304
• Top mast with cushion	• Detection for no tape, sealing failure, tape not cut off
• Belt driven with universal bearing	
• Suitable for heavy or tall-thin cartons	• 3Ø, 220/380/415/440V

Power	1Ø, 110/220V, 50/60Hz (3Ø option)
OPP	2” / 3” (please advise when ordering)
Sealing Size	L 200 ~ 550 x W 200 ~ 500 x H 120 ~ 500 mm (2”), 3” W +25mm
Capacity	11 box/min. for box length 300 mm (Belt speed 20 M/min.)
Net Weight	325 Kgs
Machine Size	L 2086 x W 1002 x H 1551 ~ 1916 mm

PW-559AF Fully-auto Folding and Sealing, Side Belt Driven Case Sealer (not include extension roller table)

Features	Option
• New tape head	• Extension roller table
• Fully-auto flap-folding & sealing	• 60 sec. auto-stop
• Both side compression rollers	• Stainless steel structure SUS #304
• Top mast with cushion	• Detection for no tape, sealing failure, tape not cut off
• Belt driven with universal bearing	

Power	3Ø, 220/380/415/440V
OPP	2” / 3” (please advise when ordering)
Sealing Size	L 300 ~ 500 x W 200 ~ 500 x H 160 ~ 500 mm (2” or 3”)
Capacity	5 box/min.
Net Weight	330 Kgs
Machine Size	2086 x 1139 x 1672 ~ 1932 mm

PW-570 Side Seal with Top & Bottom Belt Driven Case Sealer (not include extension roller table)

Features	Option
• New tape head • Stainless steel structure • Top mast with cushion • Wider belt design	• Extension roller table • Regular painting • 3Ø, 220/380/415/440V

Power	1Ø, 110/220V, 50/60Hz (3Ø option)
OPP	2” / 3” (please advise when ordering)
Sealing Size	L 150 ~ ∞ x W 200 ~ 600 x H 130 ~ 400 mm (2”), 3” W +25mm
Capacity	30 box/min. for box length 300 mm (Belt speed 20 M/min.)
Net Weight	161 Kgs
Machine Size	L 915 x W 1069 x H 1341 ~ 1551 mm

PW-570A Fully-Auto Carton Sealing Machine With Side Seal

Features	Option
• Smart sensor • Top mast with cushion • Side threading • Top and bottom belt drive	• Extension roller table • Stainless steel #304

Power	1Ø, 110/220/230/240V, 50/60Hz 3Ø, 220/380/415/440V, 50/60Hz
OPP	2”
Sealing Size	L 150 ~ ∞ x W 250 ~ 500 x H 180 ~ 500 mm
Capacity	20 box/min
Net Weight	300 Kgs
Machine Size	L 1157 x W 1157 x H 1370 ~ 1580 mm

PW-566EG Top & Bottom Belt Driven Edge Sealer (not include conveyor system)

Features	Option
• New tape head • Four edges sealed and wiped at the same time • Height electrically adjusted • PLC controlled electric system	• Infeed push-carton conveyor • Outfeed power roller conveyor • 60 sec. auto-stop • Detection for no tape, sealing failure, tape not cut off

Power	3Ø, 220/380/415/440V
OPP	2” / 3” (please advise when ordering)
Sealing Size	L 300 ~ 600 x W 250 ~ 500 x H 140 ~ 500 mm (2”), 3” W +25mm
Capacity	5 box/min. for box length 300 mm (Belt speed 20 M/min.)
Net Weight	354 Kgs
Machine Size	L 1500 x W 1471 x H 1593 ~ 1722 mm

PW-566AEG Top & Bottom Belt Driven Fully-auto Edge Sealer (not include conveyor system)

Features	Option
• New tape head • Four edges sealed and wiped at the same time • Width & Height automatically adjusted • Width & Height memory function • PLC controlled electric system	• Infeed push-carton conveyor • Outfeed power roller conveyor • 60 sec. auto-stop • Detection for no tape, sealing failure, tape not cut off

Power	3Ø, 220/380/415/440V
OPP	2” / 3” (please advise when ordering)
Sealing Size	L 300 ~ 700 x W 250 ~ 500 x H 150 ~ 500 mm (2”), 3” W +25mm
Capacity	4 box/min. (fully-auto mode); 6 box/min. (semi-auto mode)
Net Weight	404 Kgs
Machine Size	L 1693 x W 1630 x H 1658 ~ 1818 mm

PW-563BE Semi-auto Carton Erector

Features	Option
• No need for electric plug • No need for adjustment • Operation position : from Left to Right, or from Right to Left • In combination with case sealer	• Stainless steel structure SUS #304

Folding Size	L 250 ~ 500 x W 200 ~ 500 x H 150 ~ 500 mm
Capacity	Depends on carton positioning speed
Net Weight	60 Kgs
Machine Size	L 1004 x W 700 x H 779 ~ 1079 mm

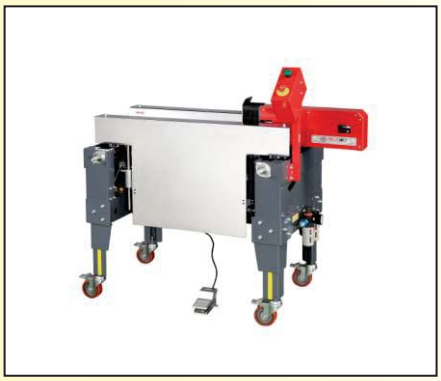

PW-563P Semi-auto Carton Erector

Features	Option
• Pneumatic driven : No need for electric plug • Operation position : From Left to Right, or from Right to Left • In combination with case sealer	• Stainless steel structure SUS #304

Folding Size	L 250 ~ 500 x W 200 ~ 400 x H 100 ~ 500 mm
Capacity	Depends on carton positioning speed
Net Weight	194 Kgs
Machine Size	1117 x 862 x 1106 ~ 1306 mm

PW-568ERT-ML Automatic Carton Erector – Vertical Seal

Features	Option
• Vertical seal • Belt driven with universal bearing • Double suction arm • Aluminum frame and acrylic safety fence	• HMI touch panel • Stainless steel structure SUS #304 • Right Hand or Left Hand performance

Power	3Ø, 220/380/415/440V
OPP	2” / 3” (please advise when ordering)
Sealing Size	L 250 ~ 510 x W 200 ~ 380 x H 120 ~ 500 mm (2”), 3” W +25mm
Capacity	9~12 box/min.
Net Weight	820 Kgs
Machine Size	L 2502 x W 2359 x H 1547 mm

PW-547ERS Automatic Carton Erector – Horizontal Seal

Features

- Horizontal seal
- Tape overlap length 60±5 mm
- Carton-supplying continuously

Power	3Ø, 220/380/415/440V
OPP	2” / 3” (please advise when ordering)
Sealing Size	L 310 ~ 575 x W 210 ~ 296 x H 170 ~ 205 mm (2”), 3” W +25mm
Capacity	8~9 box/min.
Net Weight	800 Kgs
Machine Size	3610 x 1795 x 1763 mm

PW-567ERSC Automatic Carton Erector – Horizontal Seal

Features

- Horizontal seal
- Tape overlap length 60±5 mm
- Suitable for 3 ply or 5 ply cartons

Power	3Ø, 220/380/415/440V
OPP	2" / 3" (please advise when ordering)
Sealing Size	L 420 ~ 640 x W 275 ~ 480 x H 320 ~ 400 mm (2"), 3" W +25mm
Capacity	6~7 box/min.
Net Weight	1270 Kgs
Machine Size	L 3760 x W 2169 x H 1695 mm

C-1 Standard Tapping Machine

Features

- Easy adjustment and maintenance
- Connecting rod
- Disconnector
- One-way axis

OPP	2"
Machine size	L 392 x W116 x H 523
Net weight	5.8kgs

C-6 Side-Threading Tapping Machine

Features

- Easy adjustment and maintenance
- Connecting rod
- Disconnector
- One-way axis
- Side threading

OPP	2"
Machine size	L 386 x W116 x H 544
Net weight	6.6kgs

PT ASIA GROUP

PT Asia Ltd.
998 Moo 3, Samrong Nua,
Muang, Samutprakarn 10270
Thailand

Phone: +66 (0)2 759-2271, 0717, 1937
Fax: +66 (0)2 759-3569, 380-5265
e-mail: info@ptasia.biz
www.ptasia.biz | www.ptasia.asia | www.ptasia.co.th